Board of Public Works and Safety

Agenda Item

Cover Sheet

MEETING DATE: December 19, 2023

☐ Consent Agenda Item

☒ New Item for Discussion

☐ Previously Discussed Item

☐ Miscellaneous

ITEM #: 8

INITIATED BY: Jonathan Mirgeaux

☒ Information Attached

☐ Bring Paperwork from Previous Meeting

☐ Verbal

☐ No Paperwork at Time of Packets

THE CITY OF
NOBLESVILLE
EST. 1823

12/12/2023

Re: Request for Approval to Purchase Replacement Pumps for Lift Station #2

Dear Board of Public Works & Safety:

Noblesville Utilities is requesting permission to purchase replacements for three (3) pumps at Lift Station #2. Quotes were sought for pumps that can function within the existing force main's operating curve, do not require major upgrades to the electrical system, and physically fit on the operating floor and can pass through the existing equipment access ports. The following quotes were received:

- Hidrostal $149,089
- Flygt $162,000
- Wilo $277,713

The Hidrostal pumps are the lowest price, and Hidrostal pump model is the only identified option that meets the station requirements while achieving an increase in the pumping capacity.

The Utilities is requesting approval to purchase the Hidrostal pumps as it is the lowest, responsible, responsive quote.

Jonathan Mirgeaux, PE
Director, Noblesville Utilities

THE CITY OF
NOBLESVILLE
EST. 1823

12/12/2023

Re: Executive Session:
LS 2 Pumps Upgrade
Discussion of Overall Project Strategy

Dear Board of Public Works & Safety:

Noblesville Utilities intends to upgrade the pumps and associated equipment at Lift Station #2. The inflow to the lift station during large rain events can exceed the pumping capacity, and there is a desire to further increase pumping capacity to accommodate growth for new customers tying-in to the Stony Creek Interceptor. Additionally, the existing pumps experience significant clogging due to ragging.

Noblesville Utilities has been working with an engineering Consultant (Structurepoint) who has evaluated options and prepared up to 90% designs for a major lift station replacement. Upon review, the analysis and design were flawed based on the following concerns:

- The alternatives analysis recommended a lift station replacement vs gravity sewer extension since it was estimated to be $2M cheaper at installation ($10M vs $12M based on 2018 pricing). The evaluation did not consider long-term operation and maintenance costs nor project a break-even period.
- The lift station was designed for 19-MGD (million gallons per day) capacity. This is significantly higher than the 7-MGD average daily treatment rate, the 10-MGD existing plant capacity, and the 15-MGD plant treatment rate after the proposed plant expansion (estimated 10-15 years out).
- The site design required the City Utilities to purchase a single use dump truck to haul screenings from the proposed lift station. This was due to the site configuration not accommodating access for Republic Services.

Noblesville Utilities has asked Structurepoint to update the alternatives evaluation and costs analysis utilizing the following:

- Determine lift station sizing based on:
  - Existing system – deployment of additional flow meters
  - Proposed growth – Noblesville's current flow production per EDU (Equivalent Development Unit)
- Update costs estimates for capital installation
- Prepare cost estimates for operation and maintenance. Estimate the period to reach a breakeven between the alternatives.

Noblesville Utilities would like to move forward with pump replacements within the existing lift station at this time to increase pumping capacity and achieve improved cutting resulting in reduced blockages.

Jonathan Mirgeaux, PE
Director, Noblesville Utilities

BBC Pump and Equipment Company, Inc.

October 11, 2023

To: Noblesville Utilities Department
Attn: Jonathan Mirgeaux

Subject: City of Noblesville Station #2 Pumps
BBC Quote: TS10112023

To The City of Noblesville, Utilities Department.

Thank you for the opportunity to submit pricing covering pumping equipment for the subject job.

#2 Lift Station

Pumps – Qty 3, Hidrostal model FK10-SD Dry pit, solids handling pumps with 35 hp, 1,263 RPM, 460 volts, 3 phase, 60 cycle motor, 12” suction, 10" discharge, and 82’ power cord. The pump will be capable of obtaining a condition point of 2100 GPM at 44ft TDH. The pump includes high-chrome materials of construction, Hidrostand, double independent mechanical seals with leak sensors, and motor winding thermal sensors.

Factory Testing – Qty 3, non-witness factory performance testing with report. All testing to be Hydraulic Institute latest test standards.

Start Up – Included

Manuals – Digital and hardcopies provided.

Total Net Price	$149,089.00

Comments and Clarifications:

- **Above equipment and pricing is based on provided documents. Pricing and equipment may require adjustments if additional documents or updates to project documents are presented.**
- **Estimated lead time 30 weeks after release to production.**
- **Installation of seal fails, and thermal relays are to be installed by others.**

The above price is net to you, delivered to the jobsite with freight allowed. Price is firm through quoted shipping cycle based on an order being received within Thirty days of quotation date. Delivery would be approximately 30 weeks from receipt of order with full engineering approval to proceed with manufacture. Lead times are subject to factory review at time of release of approved submittals. No sales and/or use taxes are included. Terms are Net Thirty days.

We hope you find our proposal acceptable.

Should you have any questions, please contact us.

Yours Truly,

Taylor Stock

THE CITY OF NOBLESVILLE EST. 1823

FINANCE & ACCOUNTING

Funding Verification/Encumbrance Request Form

Date to be submitted to BoW/Park Board: 12-19-23 *(put N/A if not submitting to BoW/Park Board)*

Vendor name: BBC Pump and Equipment Company, Inc.

16055

Vendor Address: 777 N Tibbs Ave, Indianapolis, IN 46222

Brief description of purchase: 3 pumps for Lift Station 2

Source of Funding:

- [x] Current Year Operational Budget
- [ ] Subsequent Year Operational Budget[1]
- [ ] Funding not yet finalized (attach explanation)[2]
- [ ] Loan or debt proceeds
- [ ] Non-Appropriated Fund[3]

Fund #		311
Department #		033
Project # *(NA if no project #)*		~~NA~~ 030.2002
	Expense Object #	**Amount**
#1	423.100	$ 149,089.00
#2		
#3		

1) ***This option may only be selected AFTER the adoption of the subsequent year budget.*** *OFA will create a PO after the start of the next year. If contract details change in between form submission and the start of the year, contact OFA Staff.*
2) *This option may only be selected in unusual circumstances. An additional FVF will need to be submitted to OFA once funding source has been determined. OFA will not create a PO until this follow-up form has been submitted.*
3) *These funds are not appropriated through the annual budget process. They include but are not limited to grant funds and impact fee funds.*

Are you requesting that a Purchase Order (PO) be created for this expenditure?

- [x] Yes *Select for all purchases/contracts that will not be paid immediately*
- [ ] No *Select ONLY if department plans to initiate payment immediately*

The Department certifies that sufficient appropriation authority exists in the stated fund and expense series to obligate the expense for future payment.

Department Director

Jonathan Mirgeaux Digitally signed by Jonathan Mirgeaux DN: C=US, E=jmirgeaux@noblesville.in.us, O=City of Noblesville, OU=Noblesville Utilities, CN=Jonathan Mirgeaux Date: 2023.12.01 15:55:26-05'00'

(Signature)

Jonathan Mirgeaux

(Printed Name)

12/1/23

(Date)

Please email completed form to OFAbudget@noblesville.in.us

FOR OFFICE OF FINANCE AND ACCOUNTING USE ONLY

OFA Action Taken

- [ ] **Purchase Order Created** **PO # (if applicable):** 2303317
- [x] **Reviewed Availability of funds** *(Contract/Purchase of over $50k or paid with debt proceeds only)*

OFA Signature Ian Zelgowski Digitally signed by Ian Zelgowski Date: 2023.12.04 14:52:37 -05'00'

- [ ] **No Action Taken** *(Department should still include this form in purchase/contract approval submission)*

Comments:

Initials: IZ Date: 12/04/2023

Installed by the CITY OF NOBLESVILLE-2013

Form 98 (Rev. 1998)

PURCHASE ORDER
CITY OF NOBLESVILLE
16 SOUTH 10TH STREET STE 270

PAGE: 1

INDIANA RETAIL TAX EXEMPT
CERTIFICATE NO. 0031216070010

FEDERAL EXCISE TAX EXEMPT
356001141

NOBLESVILLE IN 46060
PHONE: 317-776-6328
FAX: 317-776-6369

PURCHASE ORDER NO. 230337

THIS NUMBER MUST APPEAR ON INVOICES, A/P VOUCHER, DELIVERY MEMO, PACKING SLIPS, SHIPPING LABELS AND ANY CORRESPONDENCE.

SHIP TO:

TO
VENDOR # 1655
BBC PUMP & EQUIPMENT CO
PO BOX 22098
INDIANAPOLIS IN 46222

ATTN:

DATE	DEPARTMENT	SHIP TO ARRIVE BY
12/04/2023	WASTEWATER	

APPROPRIATION NUMBER	QUANTITY	UNIT	DESCRIPTION	PROJECT #	UNIT PRICE	AMOUNT
311033423.100	1.0		3 PUMPS FOR LIFT STATION 2	030.2002	149089.00	149089.00

	SHIP VIA	TOTAL 149089.00

SHIPPING INSTRUCTIONS

* SHIP PREPAID
* C.O.D. SHIPMENTS CANNOT BE ACCEPTED
* PURCHASE ORDER NUMBER MUST APPEAR ON ALL SHIPPING LABELS.
* THIS ORDER ISSUED IN COMPLIANCE WITH CHAPTER 99, ACTS 1945 AND ACTS AMENDATORY THEREOF AND SUPPLEMENTAL THERETO.

PAYMENT

* A/P VOUCHER CANNOT BE APPROVED FOR PAYMENT UNLESS THE P.O. NUMBER IS MADE A PART OF THE VOUCHER AND EVERY INVOICE AND VOUCHER HAS THE PROPER SWORN AFFIDAVIT ATTACHED.
* I HEREBY CERTIFY THAT THERE IS AN UNOBLIGATED BALANCE IN THIS APPROPRIATION SUFFICIENT TO PAY FOR THE ABOVE ORDER.

ORDERED BY Jeffrey A. Grading

TITLE CONTROLLER

ORIGINAL - VENDOR'S COPY

NT 3202 MT 3~ 641

Patented self cleaning semi-open channel impeller, ideal for pumping in waste water applications. Modular based design with high adaptation grade.

Technical specification

Curves according to: Water, pure Water, pure [100%],39.2 °F,62.42 lb/ft³,1.6891E-5 ft²/s

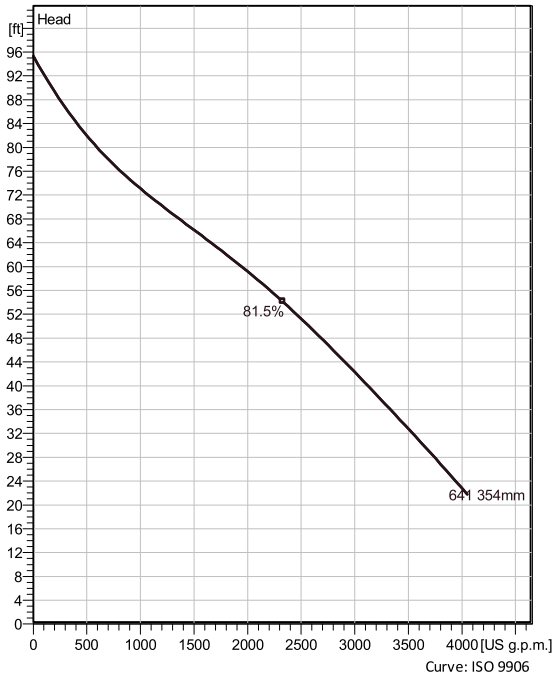

Nominal (mean) data shown. Under- and over-performance from this data should be expected due to standard manufacturing tolerances.
Please consult your local Flygt representative for performance guarantees.

Configuration

Motor number
N3202.820 30-37-6IE-D IE3 44hp

Installation type
T - Vertical Permanent, Dry

Impeller diameter
354 mm

Discharge diameter
8 inch

Pump information

Impeller diameter
354 mm

Discharge diameter
8 inch

Inlet diameter
250 mm

Maximum operating speed
1180 rpm

Number of blades
2

Max. fluid temperature
40 °C

Material

Impeller
Hard-Iron ™

Project	Xylect-21289301	**Created by**	THOMAS BOWMAN		
Block		**Created on**	10/16/2023	**Last update**	10/16/2023

NT 3202 MT 3~ 641

Technical specification

Motor - General

Motor number	Phases	Rated speed	Rated power
N3202.820 30-37-6IE-D IE3 44hp	3~	1180 rpm	44 hp
ATEX approved	**Number of poles**	**Rated current**	**Stator variant**
No	6	53 A	1
Frequency	**Rated voltage**	**Insulation class**	**Type of Duty**
60 Hz	460 V	H	S1
Version code			
820			

Motor - Technical

Power factor - 1/1 Load	Motor efficiency - 1/1 Load	Total moment of inertia	Starts per hour max.
0.82	94.4 %	14.9 lb ft²	30
Power factor - 3/4 Load	**Motor efficiency - 3/4 Load**	**Starting current, direct starting**	
0.76	94.9 %	370 A	
Power factor - 1/2 Load	**Motor efficiency - 1/2 Load**	**Starting current, star-delta**	
0.64	94.9 %	123 A	

Project	Xylect-21289301	**Created by**	THOMAS BOWMAN		
Block		**Created on**	10/16/2023	**Last update**	10/16/2023

NT 3202 MT 3~ 641

Performance curve

Duty point

Flow	Head
2720 US g.p.m.	47.4 ft

Curves according to: Water, pure Water, pure [100%],39.2 °F,62.42 lb/ft³,1.6891E-5 ft²/s

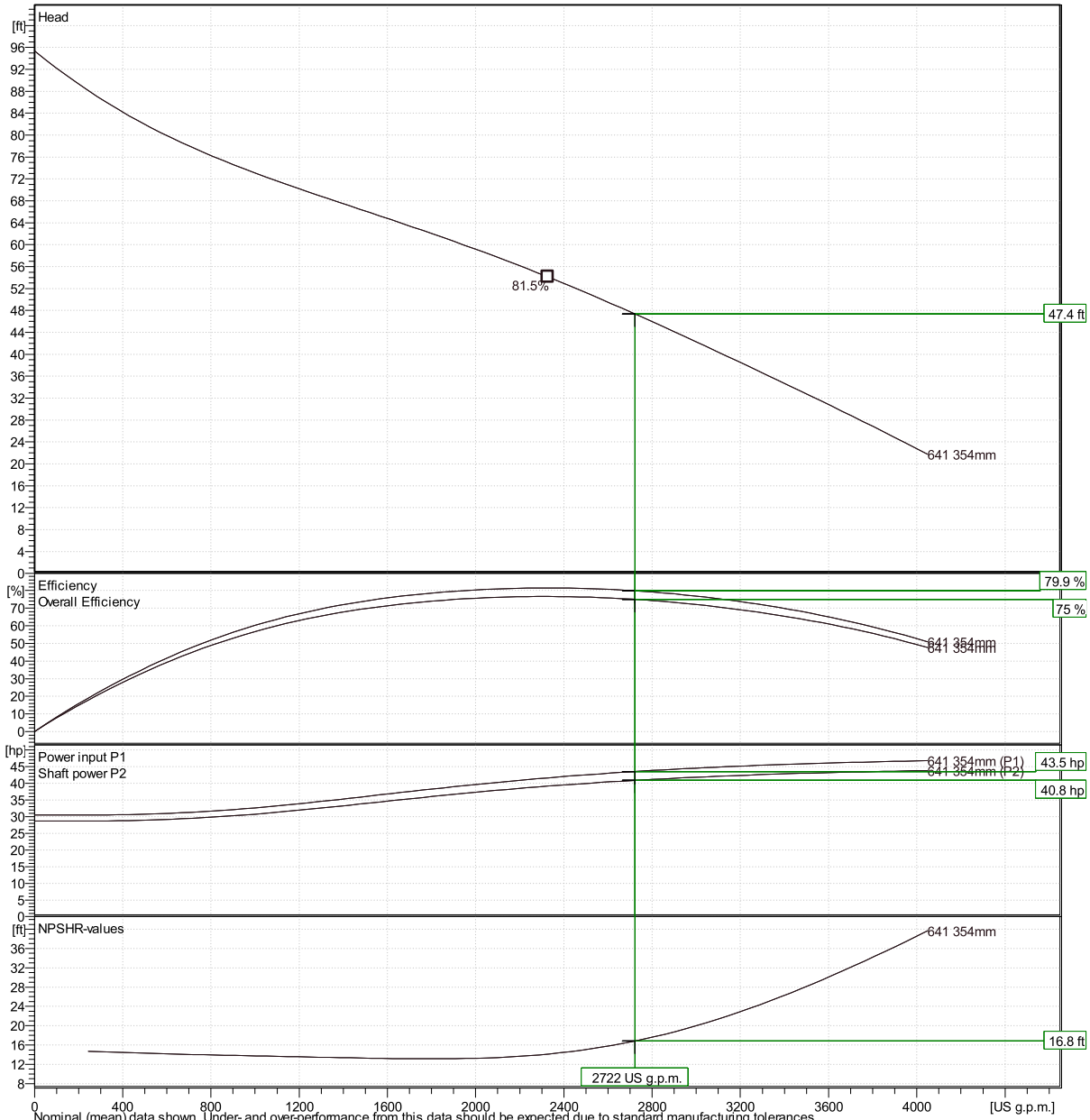

Nominal (mean) data shown. Under- and over-performance from this data should be expected due to standard manufacturing tolerances.
Please consult your local Flygt representative for performance guarantees.

Curve: ISO 9906

Xylect-21289301	THOMAS BOWMAN		
	Created on 10/16/2023	**Last update**	10/16/2023

NT 3202 MT 3~ 641

Duty Analysis

Curves according to: Water, pure [100%] ; 39.2°F; 62.42lb/ft³; 1.6891E-5ft²/s

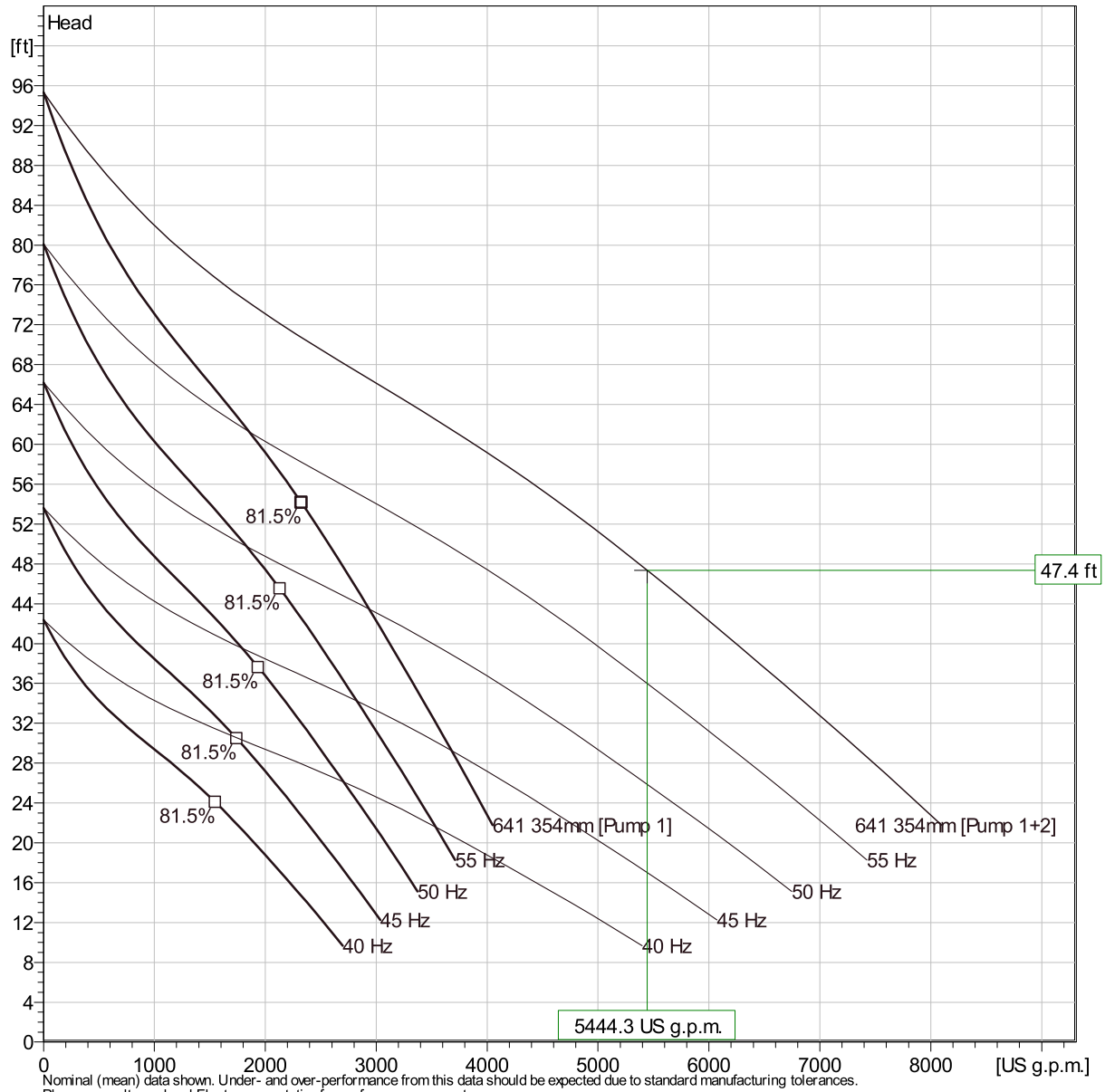

Nominal (mean) data shown. Under- and over-performance from this data should be expected due to standard manufacturing tolerances.
Please consult your local Flygt representative for performance guarantees.

Operating characteristics

Pumps / Systems	Flow	Head	Shaft power	Flow	Head	Shaft power	Hydr.eff.	Spec. Energy	NPSHre
	US g.p.m.	ft	hp	US g.p.m.	ft	hp		kWh/US MG	ft
2 / 1	2720	47.4	40.8	5440	47.4	81.7	79.9 %	199	16.8
1 / 1	3440	33.9	42.8	3440	33.9	42.8	68.9 %	165	27

Project		**Created by**	THOMAS BOWMAN		
Block	Xylect-21289301	**Created on**	10/16/2023	**Last update**	10/16/2023

NT 3202 MT 3~ 641

VFD Curve

Curves according to: Water, pure ,39.2 °F,62.42 lb/ft³,1.6891E-5 ft²/s

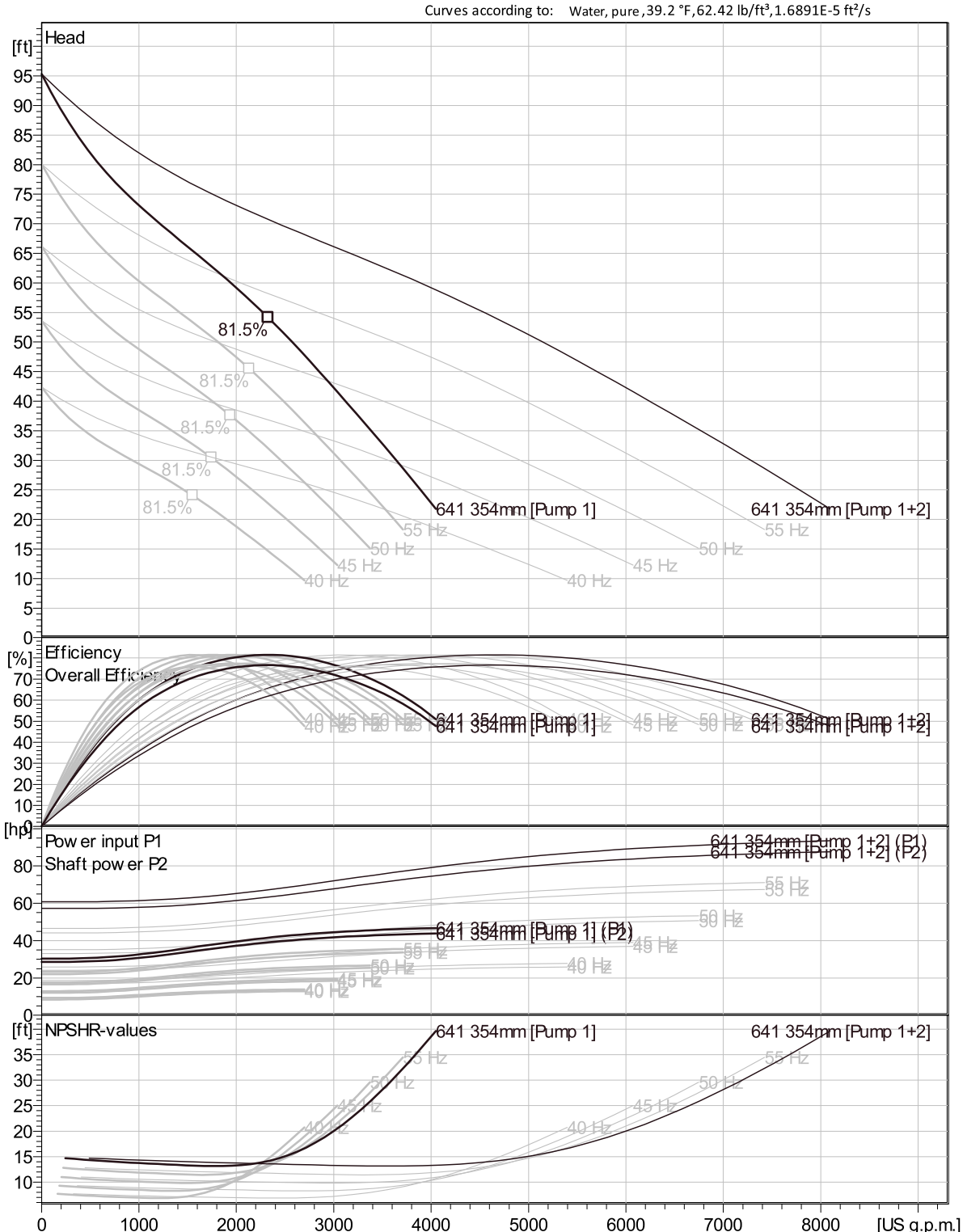

Nominal (mean) data shown. Under- and over-performance from this data should be expected due to standard manufacturing tolerances.
Please consult your local Flygt representative for performance guarantees.

Curve: ISO 9906

Project	Xylect-21289301	**Created by**	THOMAS BOWMAN		
Block		**Created on**	10/16/2023	**Last update**	10/16/2023

NT 3202 MT 3~ 641

VFD Analysis

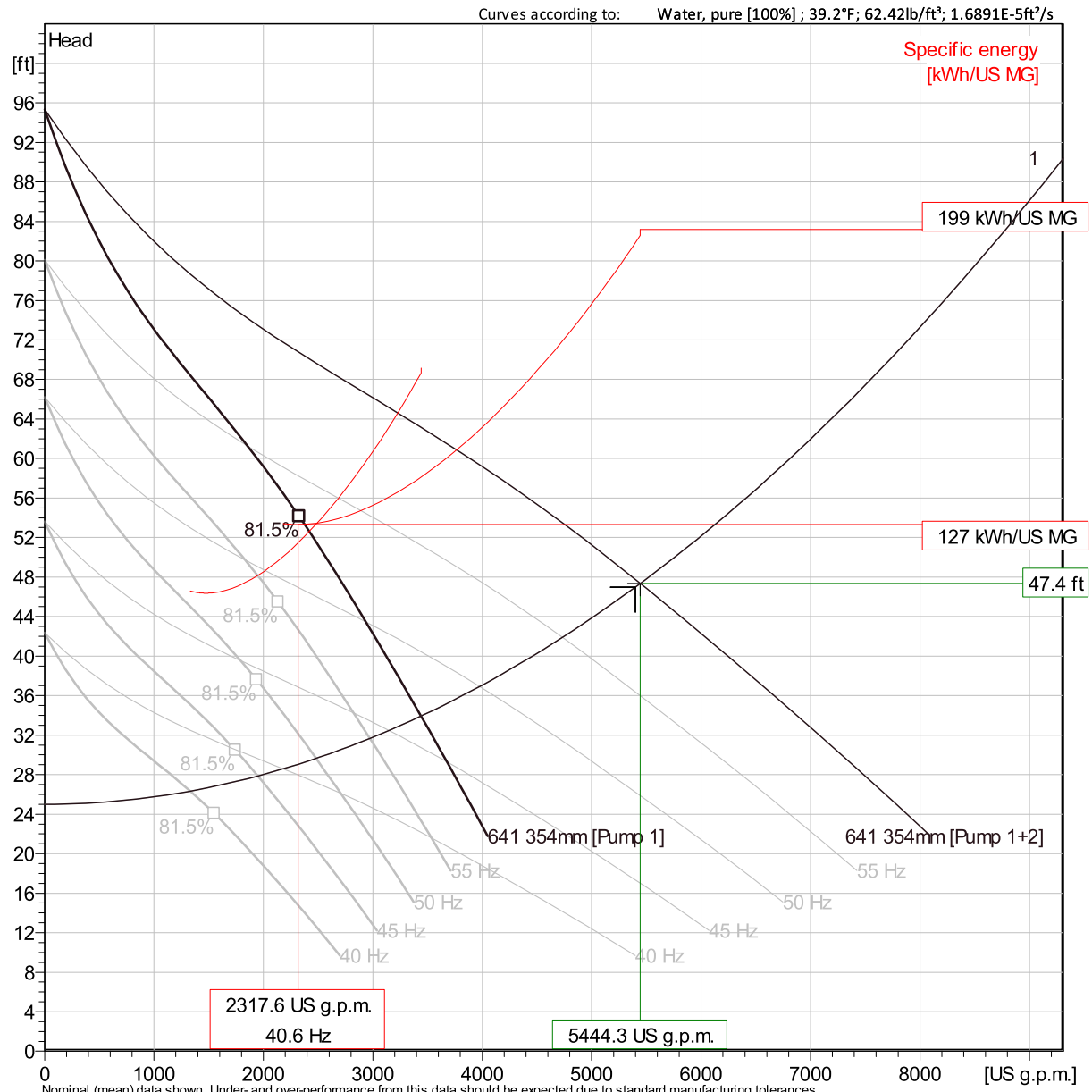

Nominal (mean) data shown. Under- and over-performance from this data should be expected due to standard manufacturing tolerances.
Please consult your local Flygt representative for performance guarantees.

Operating Characteristics

Pumps / Systems	Frequency	Flow	Head	Shaft power	Flow	Head	Shaft power	Hydr.eff.	Specific energy	NPSHre
		US g.p.m.	ft	hp	US g.p.m.	ft	hp		kWh/US MG	ft
2 / 1	60 Hz	2720	47.4	40.8	5440	47.4	81.7	79.9 %	199	16.8
2 / 1	55 Hz	2370	41.9	31	4730	41.9	62	80.8 %	172	13.6
2 / 1	50 Hz	1990	36.9	22.8	3980	36.9	45.6	81.5 %	150	10.8
2 / 1	45 Hz	1570	32.5	16	3150	32.5	31.9	80.9 %	134	8.46

Project	Xylect-21289301	**Created by**	THOMAS BOWMAN		
Block		**Created on**	10/16/2023	**Last update**	10/16/2023

NT 3202 MT 3~ 641

VFD Analysis

Curves according to: Water, pure [100%] ; 39.2°F; 62.42lb/ft³; 1.6891E-5ft²/s

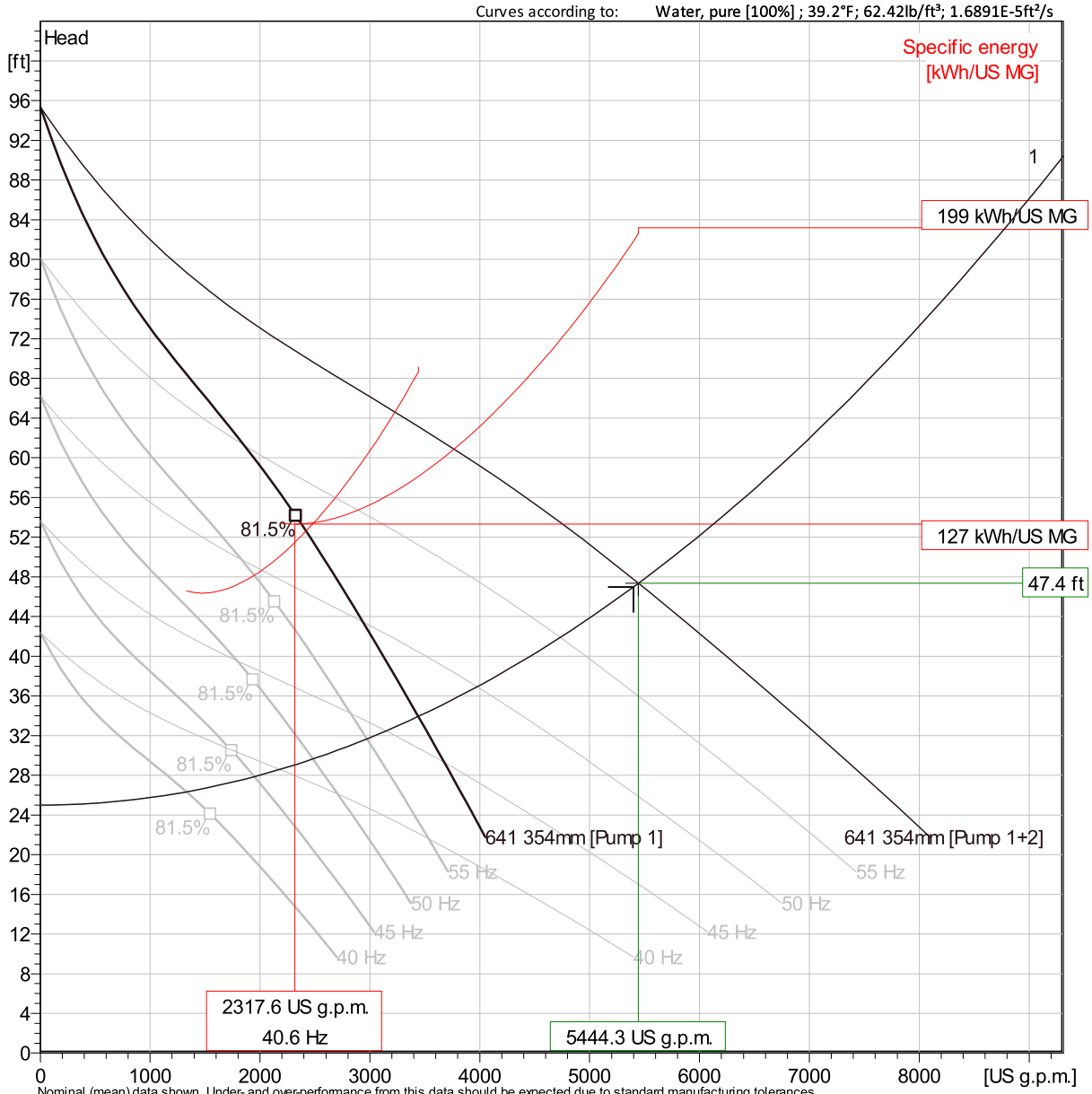

Nominal (mean) data shown. Under- and over-performance from this data should be expected due to standard manufacturing tolerances.
Please consult your local Flygt representative for performance guarantees.

Operating Characteristics

Pumps / Systems	Frequency	Flow	Head	Shaft power	Flow	Head	Shaft power	Hydr.eff.	Specific energy	NPSHre
		US g.p.m.	ft	hp	US g.p.m.	ft	hp		kWh/US MG	ft
2 / 1	40 Hz	1090	28.6	10.3	2180	28.6	20.7	76.3 %	127	6.9
1 / 1	60 Hz	3440	33.9	42.8	3440	33.9	42.8	68.9 %	165	27
1 / 1	55 Hz	2970	31.7	32.7	2970	31.7	32.7	72.9 %	144	20.5
1 / 1	50 Hz	2480	29.6	24.1	2480	29.6	24.1	77.1 %	127	14.7

Project	Xylect-21289301	**Created by**	THOMAS BOWMAN		
Block		**Created on**	10/16/2023	**Last update**	10/16/2023

NT 3202 MT 3~ 641

VFD Analysis

Curves according to: Water, pure [100%] ; 39.2°F; 62.42lb/ft³; 1.6891E-5ft²/s

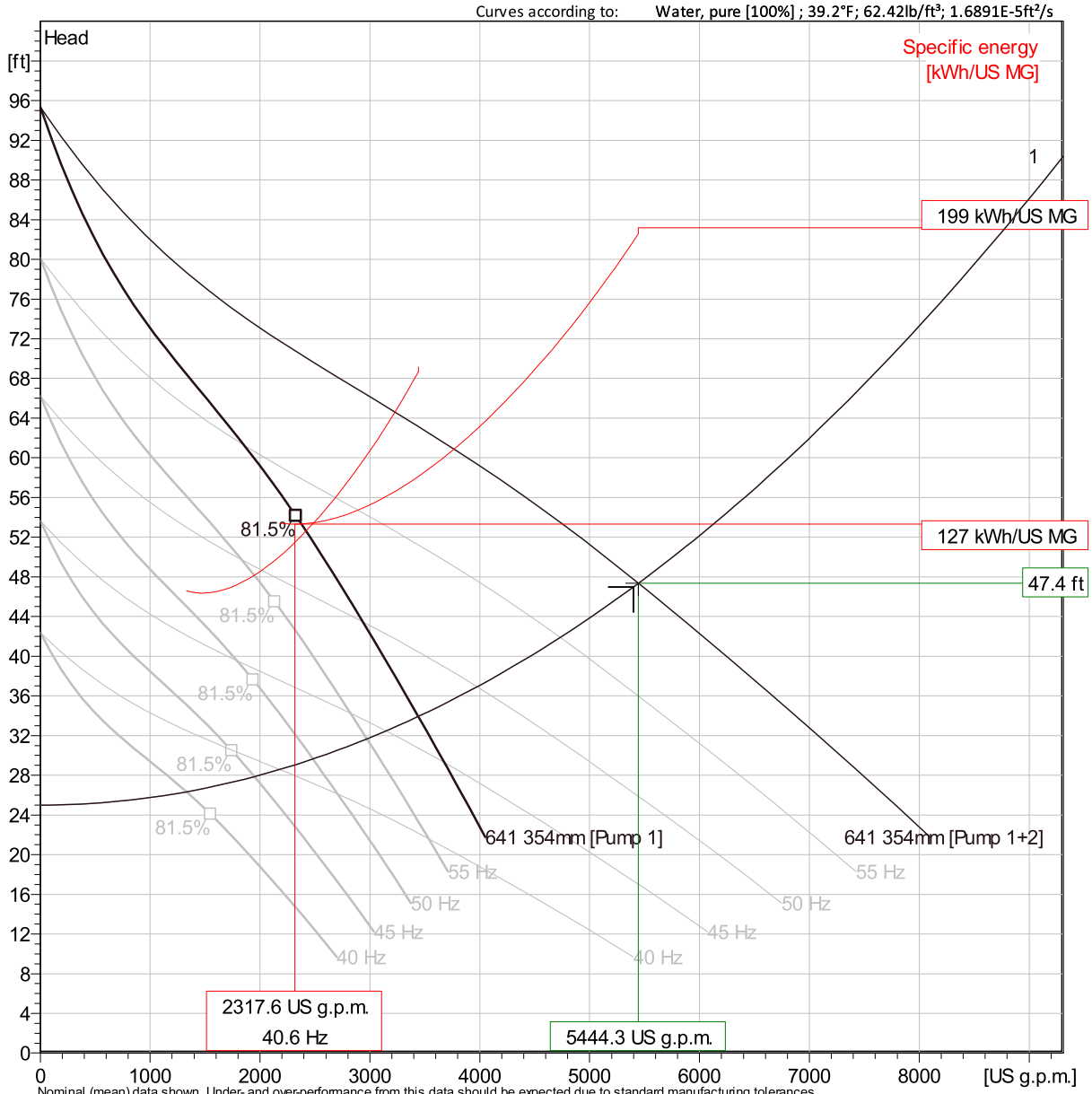

Nominal (mean) data shown. Under- and over-performance from this data should be expected due to standard manufacturing tolerances.
Please consult your local Flygt representative for performance guarantees.

Operating Characteristics

Pumps / Systems	Frequency	Flow	Head	Shaft power	Flow	Head	Shaft power	Hydr.eff.	Specific energy	NPSHre
		US g.p.m.	ft	hp	US g.p.m.	ft	hp		kWh/US MG	ft
1 / 1	45 Hz	1950	27.9	17	1950	27.9	17	80.7 %	115	9.94
1 / 1	40 Hz	1330	26.3	11	1330	26.3	11	80.3 %	111	6.93

Project	Xylect-21289301	**Created by**	THOMAS BOWMAN		
Block		**Created on**	10/16/2023	**Last update**	10/16/2023

NT 3202 MT 3~ 641

Dimensional drawing

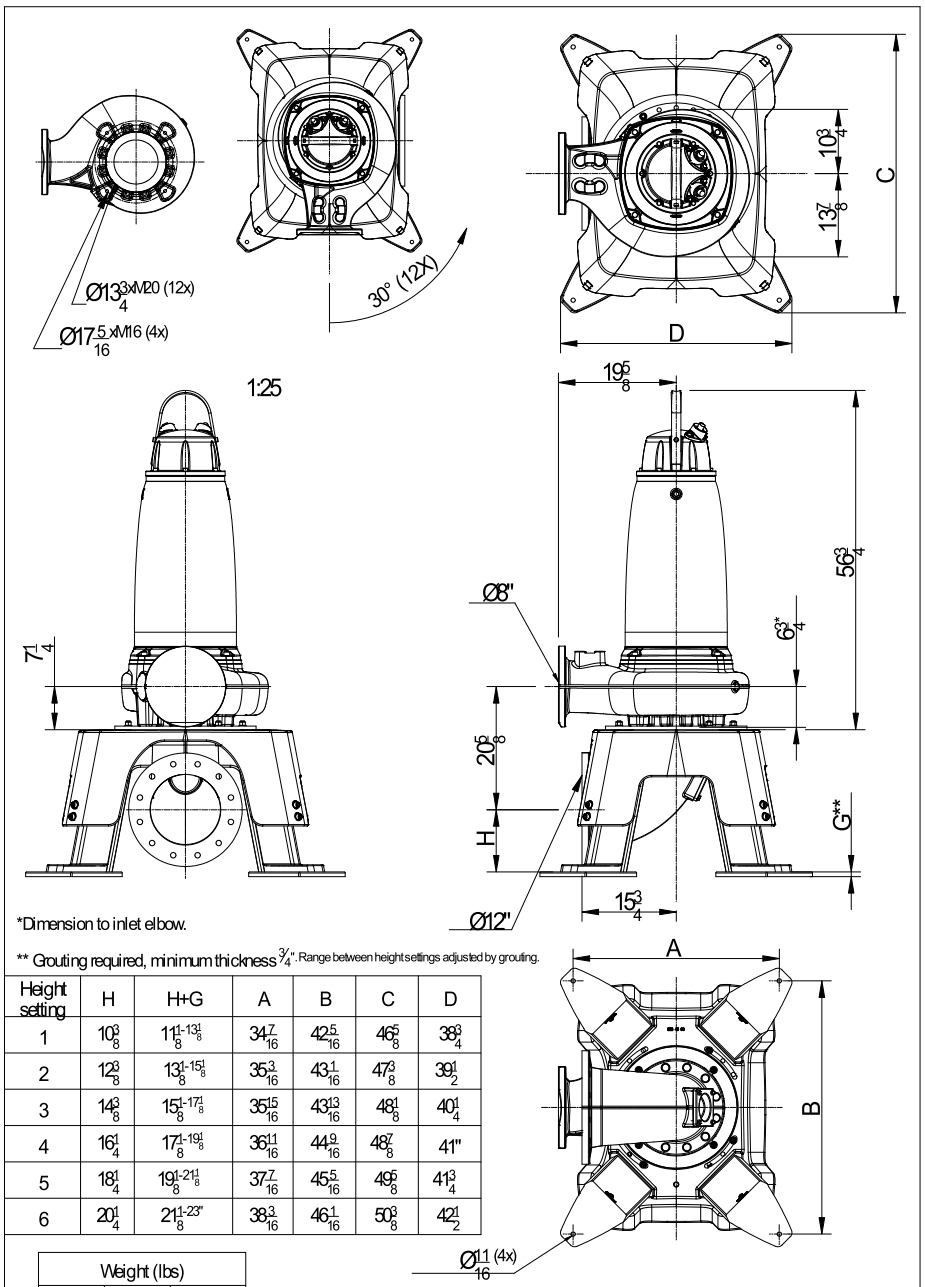

*Dimension to inlet elbow.

** Grouting required, minimum thickness 3/4". Range between height settings adjusted by grouting.

Height setting	H	H+G	A	B	C	D
1	10 3/8	11 1/8-13 1/8	34 7/16	42 5/16	46 5/8	38 3/4
2	12 3/8	13 1/8-15 1/8	35 3/16	43 1/16	47 3/8	39 1/2
3	14 3/8	15 1/8-17 1/8	35 15/16	43 13/16	48 1/8	40 1/4
4	16 1/4	17 1/8-19 1/8	36 11/16	44 9/16	48 7/8	41"
5	18 1/4	19 1/8-21 1/8	37 7/16	45 5/16	49 5/8	41 3/4
6	20 1/4	21 1/8-23"	38 3/16	46 1/16	50 3/8	42 1/2

Weight (lbs)		
Pump	Stand	Inlet elbow
1655	1800	225

NT,FT	3202	MT	Withstand 6poles	Discharge outlet Pump outlet Ø8"	Scale 1:20	Date 190725
800,810,820,830,840,850,860,870				Pump inlet Ø10" Suction inlet Ø12"	Drawing number 8409400	Revision 0

Project	Xylect-21289301	**Created by**	THOMAS BOWMAN
Block		**Created on**	10/16/2023 **Last update** 10/16/2023

NT 3202 MT 3~ 642

Patented self cleaning semi-open channel impeller, ideal for pumping in waste water applications. Modular based design with high adaptation grade.

Technical specification

Curves according to: Water, pure Water, pure [100%],39.2 °F,62.42 lb/ft³,1.6891E-5 ft²/s

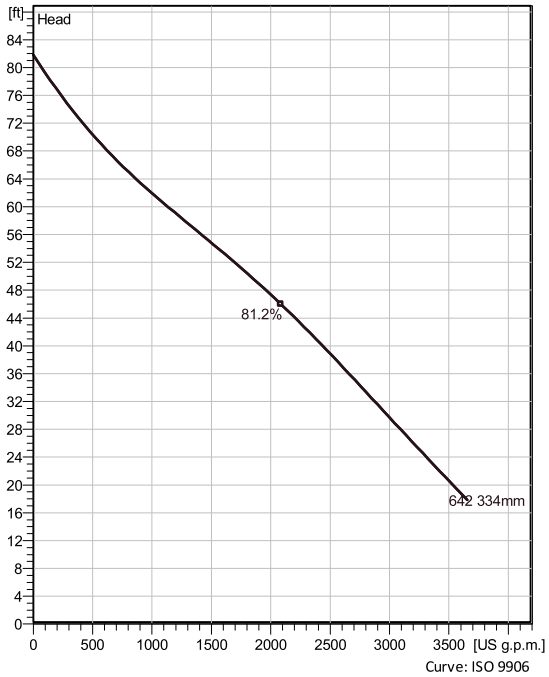

Nominal (mean) data shown. Under- and over-performance from this data should be expected due to standard manufacturing tolerances.
Please consult your local Flygt representative for performance guarantees.

Configuration

Motor number
N3202.185 30-18-6AA-D 35hp

Installation type
T - Vertical Permanent, Dry

Impeller diameter
334 mm

Discharge diameter
8 inch

Pump information

Impeller diameter
334 mm

Discharge diameter
8 inch

Inlet diameter
250 mm

Maximum operating speed
1165 rpm

Number of blades
2

Max. fluid temperature
40 °C

Material

Impeller
Hard-Iron ™

Project	Xylect-21289301	**Created by**	THOMAS BOWMAN		
Block		**Created on**	10/16/2023	**Last update**	10/16/2023

NT 3202 MT 3~ 642

Technical specification

Motor - General

Motor number	Phases	Rated speed	Rated power
N3202.185 30-18-6AA-D 35hp	3~	1165 rpm	35 hp
ATEX approved	**Number of poles**	**Rated current**	**Stator variant**
No	6	42 A	4
Frequency	**Rated voltage**	**Insulation class**	**Type of Duty**
60 Hz	460 V	H	S1
Version code			
185			

Motor - Technical

Power factor - 1/1 Load	Motor efficiency - 1/1 Load	Total moment of inertia	Starts per hour max.
0.88	89.0 %	9.28 lb ft²	30
Power factor - 3/4 Load	**Motor efficiency - 3/4 Load**	**Starting current, direct starting**	
0.85	90.0 %	225 A	
Power factor - 1/2 Load	**Motor efficiency - 1/2 Load**	**Starting current, star-delta**	
0.79	90.5 %	75 A	

Project	Xylect-21289301	**Created by**	THOMAS BOWMAN		
Block		**Created on**	10/16/2023	**Last update**	10/16/2023

NT 3202 MT 3~ 642

Performance curve

Duty point

Flow	Head
2360 US g.p.m.	41.4 ft

Curves according to: Water, pure Water, pure [100%],39.2 °F,62.42 lb/ft³,1.6891E-5 ft²/s

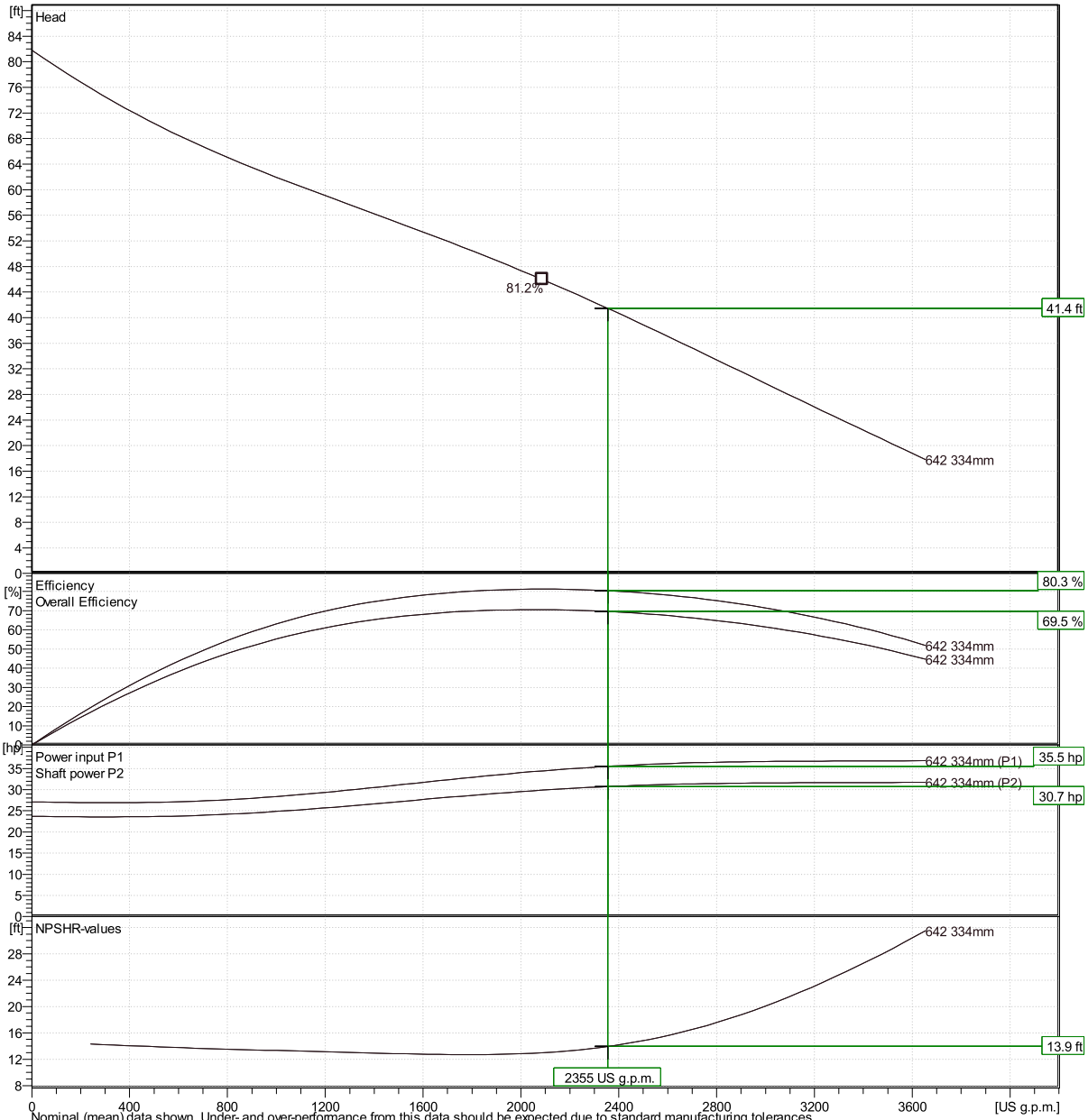

Nominal (mean) data shown. Under- and over-performance from this data should be expected due to standard manufacturing tolerances.
Please consult your local Flygt representative for performance guarantees.

Curve: ISO 9906

Xylect-21289301		THOMAS BOWMAN	
	Created on	10/16/2023 **Last update**	10/16/2023

NT 3202 MT 3~ 642

Duty Analysis

Curves according to: Water, pure [100%] ; 39.2°F; 62.42lb/ft³; 1.6891E-5ft²/s

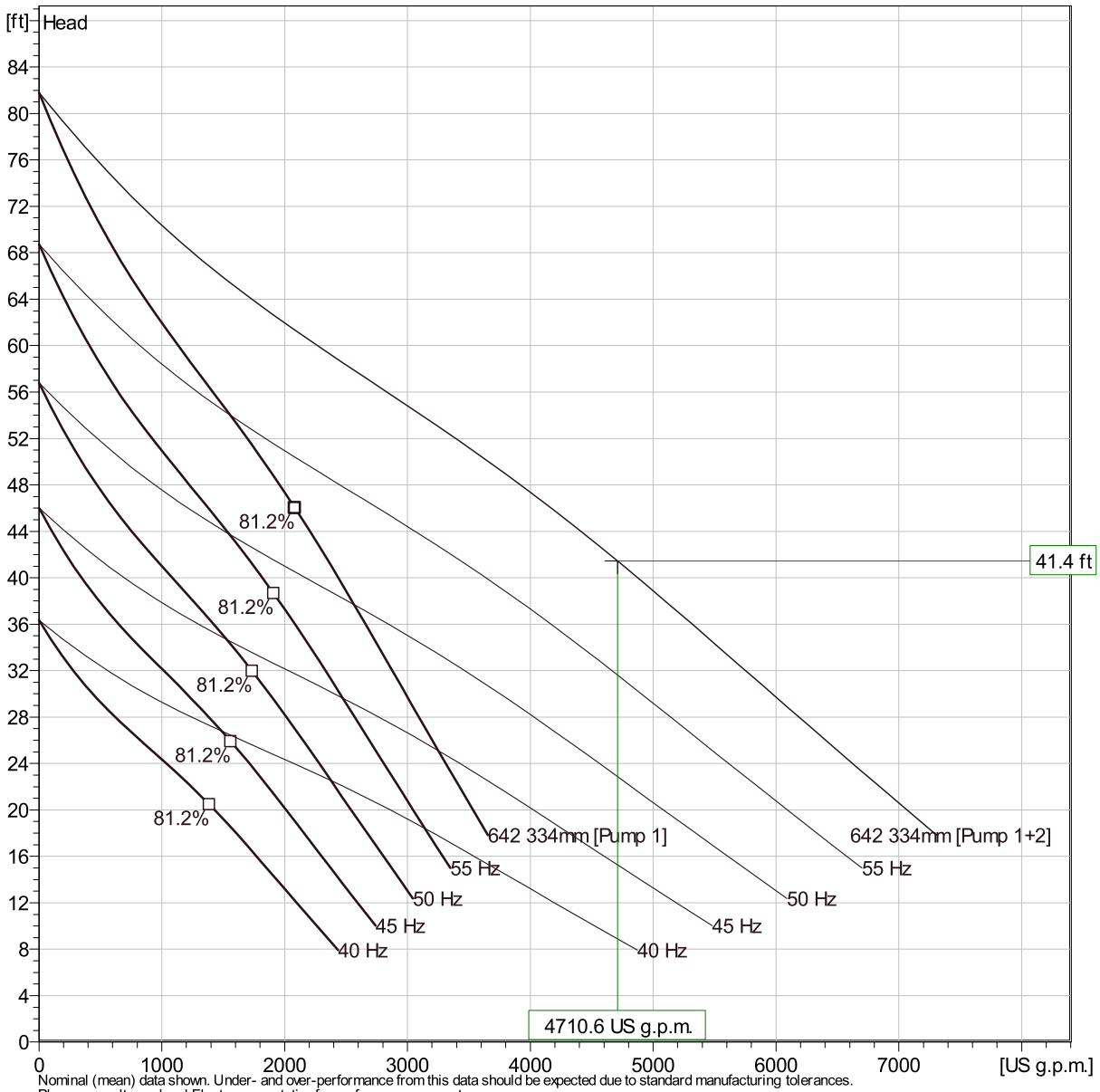

Nominal (mean) data shown. Under- and over-performance from this data should be expected due to standard manufacturing tolerances.
Please consult your local Flygt representative for performance guarantees.

Operating characteristics

Pumps / Systems	Flow	Head	Shaft power	Flow	Head	Shaft power	Hydr.eff.	Spec. Energy	NPSHre
	US g.p.m.	ft	hp	US g.p.m.	ft	hp		kWh/US MG	ft
2 / 1	2360	41.4	30.7	4710	41.4	61.5	80.3 %	187	13.9
1 / 1	2910	31.3	31.5	2910	31.3	31.5	73.2 %	156	18.9

Project		**Created by**	THOMAS BOWMAN		
Block	Xylect-21289301	**Created on**	10/16/2023	**Last update**	10/16/2023

NT 3202 MT 3~ 642

VFD Curve

Curves according to: Water, pure ,39.2 °F,62.42 lb/ft³,1.6891E-5 ft²/s

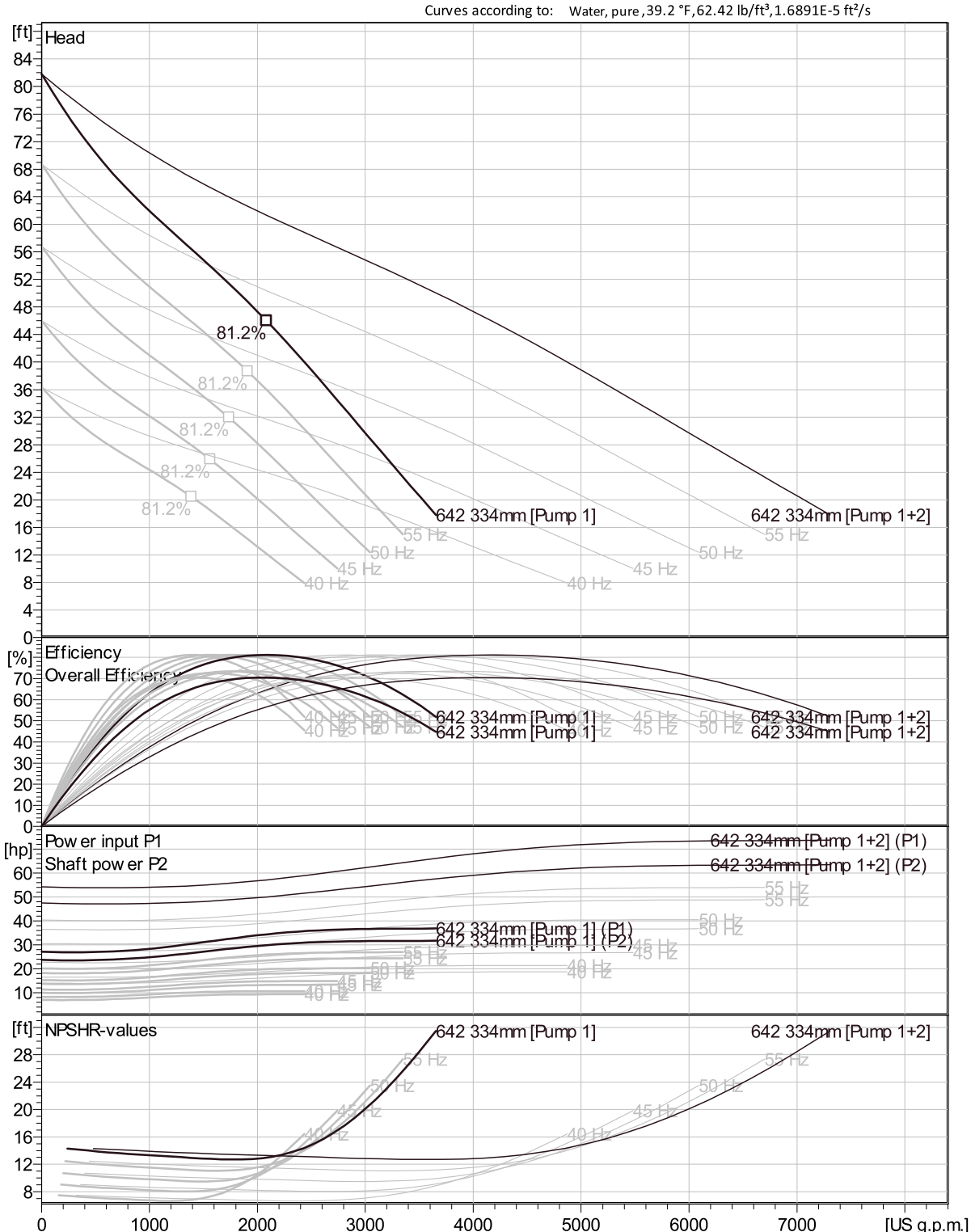

Nominal (mean) data shown. Under- and over-performance from this data should be expected due to standard manufacturing tolerances.
Please consult your local Flygt representative for performance guarantees.

Curve: ISO 9906

Project	Xylect-21289301	**Created by**	THOMAS BOWMAN		
Block		**Created on**	10/16/2023	**Last update**	10/16/2023

NT 3202 MT 3~ 642

VFD Analysis

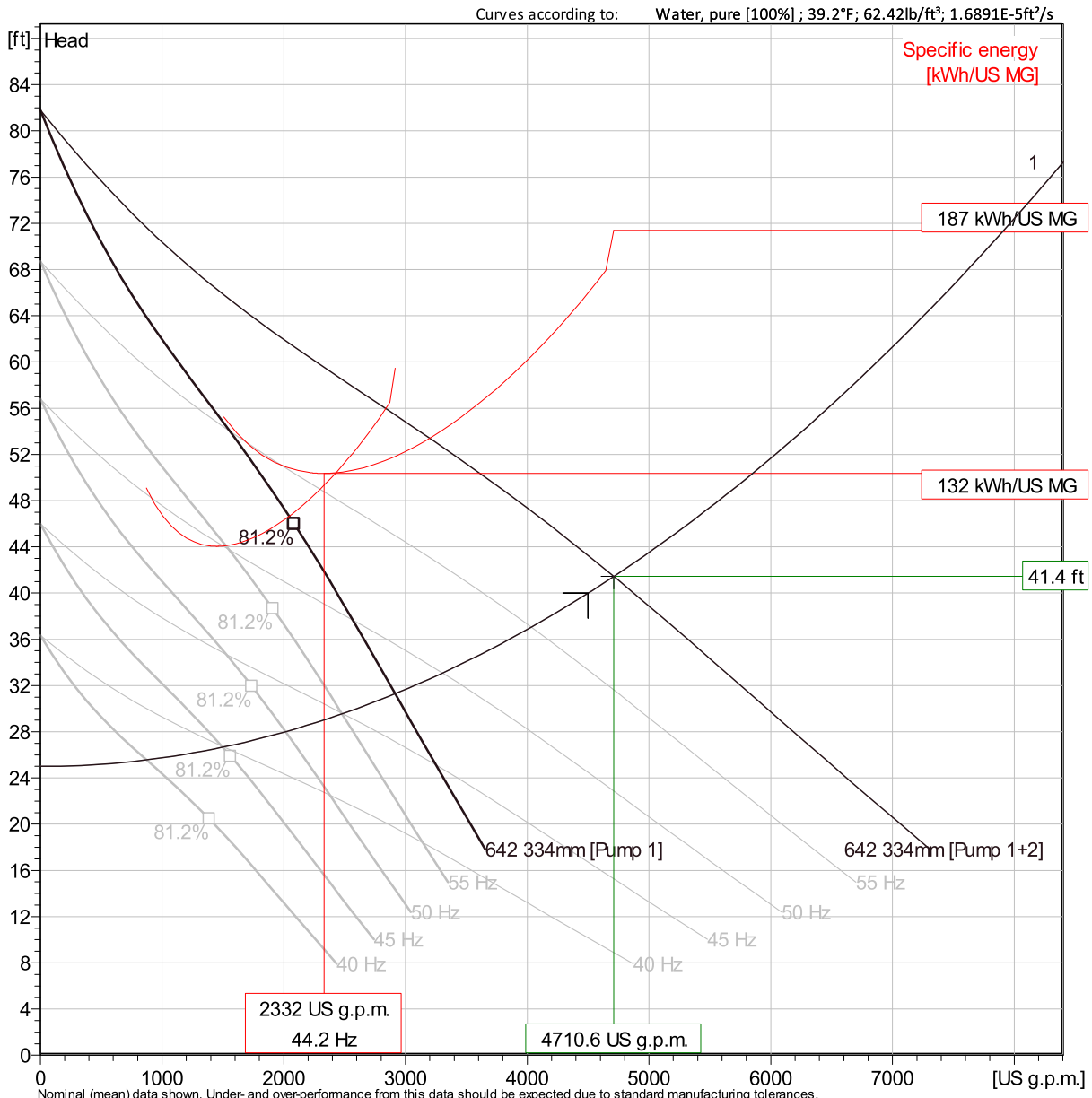

Nominal (mean) data shown. Under- and over-performance from this data should be expected due to standard manufacturing tolerances.
Please consult your local Flygt representative for performance guarantees.

Operating Characteristics

Pumps / Systems	Frequency	Flow	Head	Shaft power	Flow	Head	Shaft power	Hydr.eff.	Specific energy	NPSHre
		US g.p.m.	ft	hp	US g.p.m.	ft	hp		kWh/US MG	ft
2 / 1	60 Hz	2360	41.4	30.7	4710	41.4	61.5	80.3 %	187	13.9
2 / 1	55 Hz	2020	37.1	23.3	4030	37.1	46.6	81 %	159	11.6
2 / 1	50 Hz	1650	33.1	17.1	3300	33.1	34.1	81.1 %	142	9.57
2 / 1	45 Hz	1240	29.6	11.8	2480	29.6	23.6	78.8 %	132	8.03

Project	Xylect-21289301	**Created by**	THOMAS BOWMAN		
Block		**Created on**	10/16/2023	**Last update**	10/16/2023

NT 3202 MT 3~ 642

VFD Analysis

Curves according to: Water, pure [100%] ; 39.2°F; 62.42lb/ft³; 1.6891E-5ft²/s

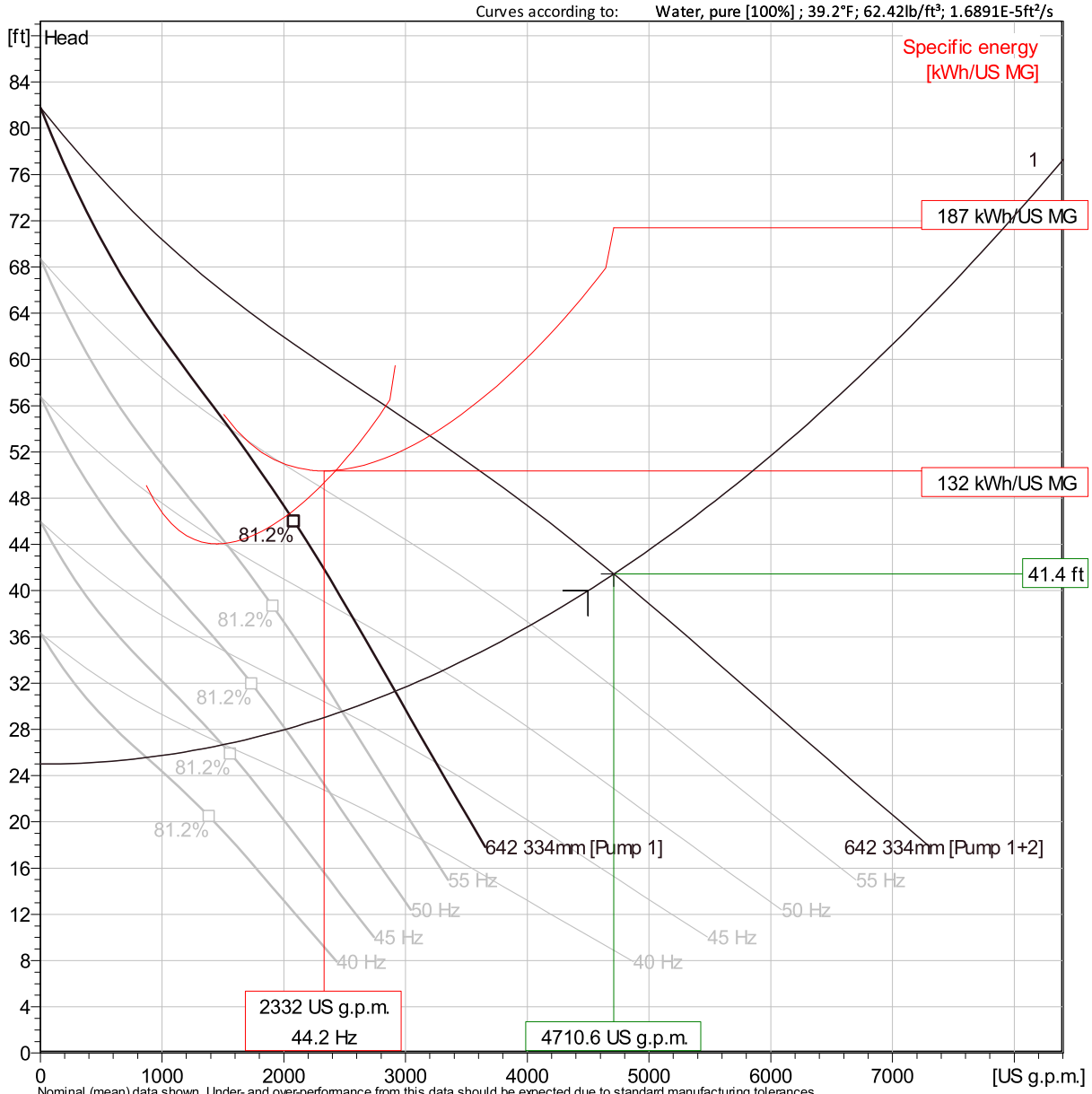

Nominal (mean) data shown. Under- and over-performance from this data should be expected due to standard manufacturing tolerances.
Please consult your local Flygt representative for performance guarantees.

Operating Characteristics

Pumps / Systems	Frequency	Flow	Head	Shaft power	Flow	Head	Shaft power	Hydr.eff.	Specific energy	NPSHre
		US g.p.m.	ft	hp	US g.p.m.	ft	hp		kWh/US MG	ft
2 / 1	40 Hz	754	26.7	7.52	1510	26.7	15	67.7 %	145	6.9
1 / 1	60 Hz	2910	31.3	31.5	2910	31.3	31.5	73.2 %	156	18.9
1 / 1	55 Hz	2480	29.6	24.2	2480	29.6	24.2	76.7 %	134	14.4
1 / 1	50 Hz	2020	28	17.9	2020	28	17.9	79.9 %	122	10.7

Project	Xylect-21289301	**Created by**	THOMAS BOWMAN		
Block		**Created on**	10/16/2023	**Last update**	10/16/2023

NT 3202 MT 3~ 642

VFD Analysis

Curves according to: Water, pure [100%] ; 39.2°F; 62.42lb/ft³; 1.6891E-5ft²/s

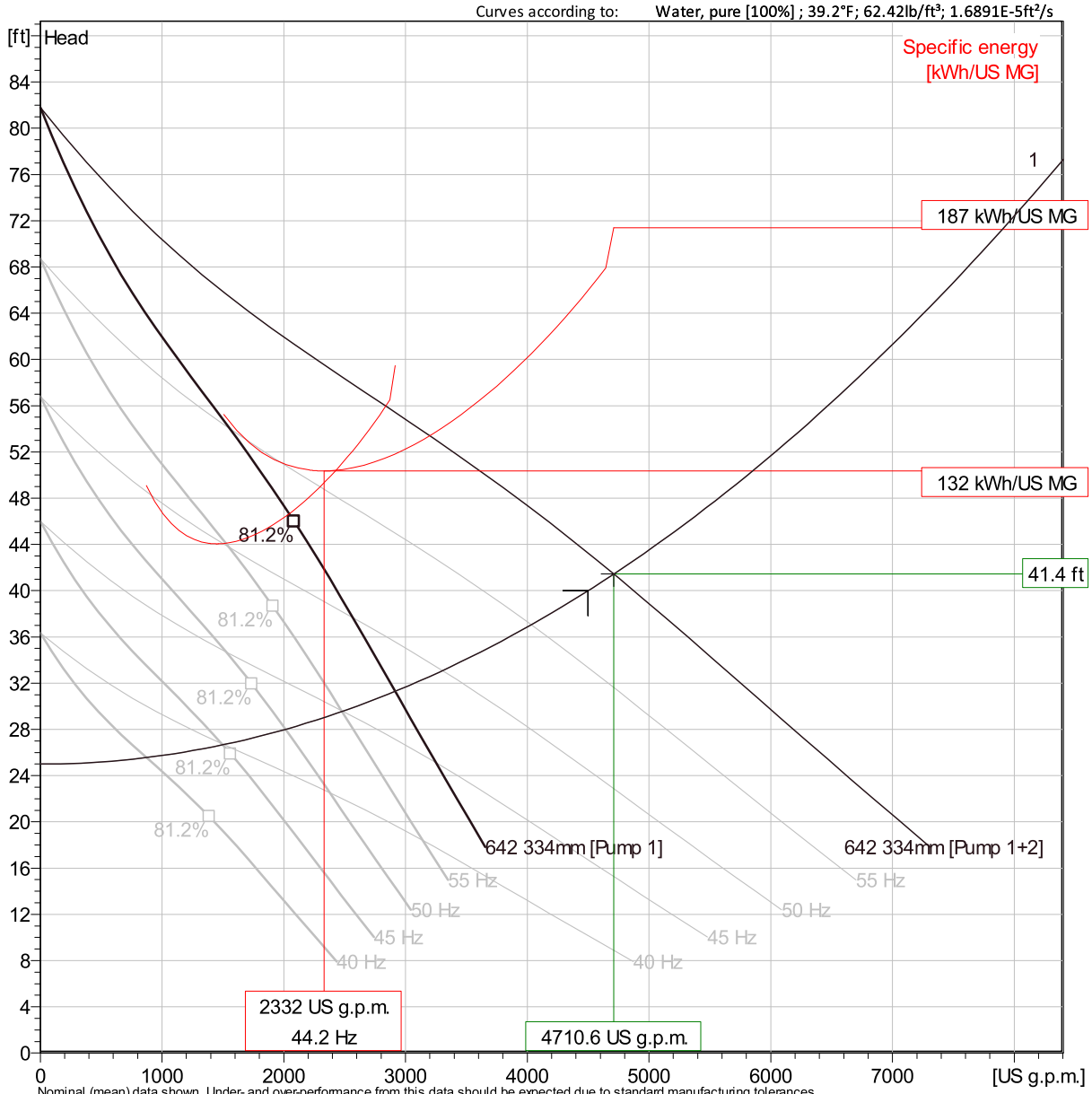

Nominal (mean) data shown. Under- and over-performance from this data should be expected due to standard manufacturing tolerances.
Please consult your local Flygt representative for performance guarantees.

Operating Characteristics

Pumps / Systems	Frequency	Flow	Head	Shaft power	Flow	Head	Shaft power	Hydr.eff.	Specific energy	NPSHre
		US g.p.m.	ft	hp	US g.p.m.	ft	hp		kWh/US MG	ft
1 / 1	45 Hz	1500	26.7	12.5	1500	26.7	12.5	81.1 %	116	8.1
1 / 1	40 Hz	872	25.6	7.77	872	25.6	7.77	72.6 %	129	6.81

Project	Xylect-21289301	**Created by**	THOMAS BOWMAN		
Block		**Created on**	10/16/2023	**Last update**	10/16/2023

NT 3202 MT 3~ 642

Dimensional drawing

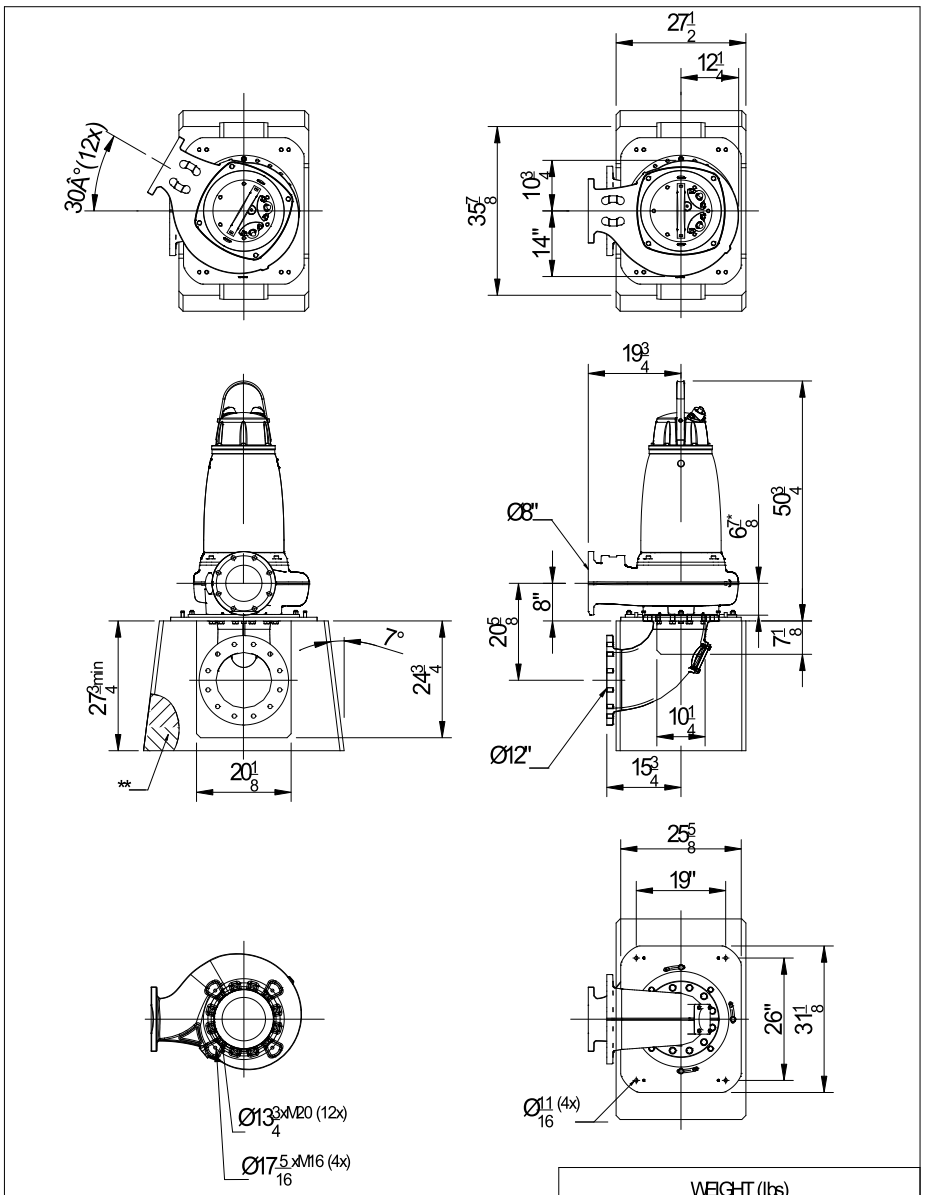

WEIGHT (lbs)		
Pump	Stand	Inlet elbow
1425	90	225

*Dimension to inlet elbow flange.
**Concrete plinth not supplied by Xylem

FLYGT	NT,FT	3202	MT	6poles	Discharge outlet / Pump outlet Ø8"	Scale 1:25	Date 190930
	090, 095, 180, 185, 350, 390, 660, 670				Pump inlet Ø10" / Suction inlet Ø12"	Drawing number 7788400	Revision 6

Project	Xylect-21289301	**Created by**	THOMAS BOWMAN
Block		**Created on**	10/16/2023 **Last update** 10/16/2023

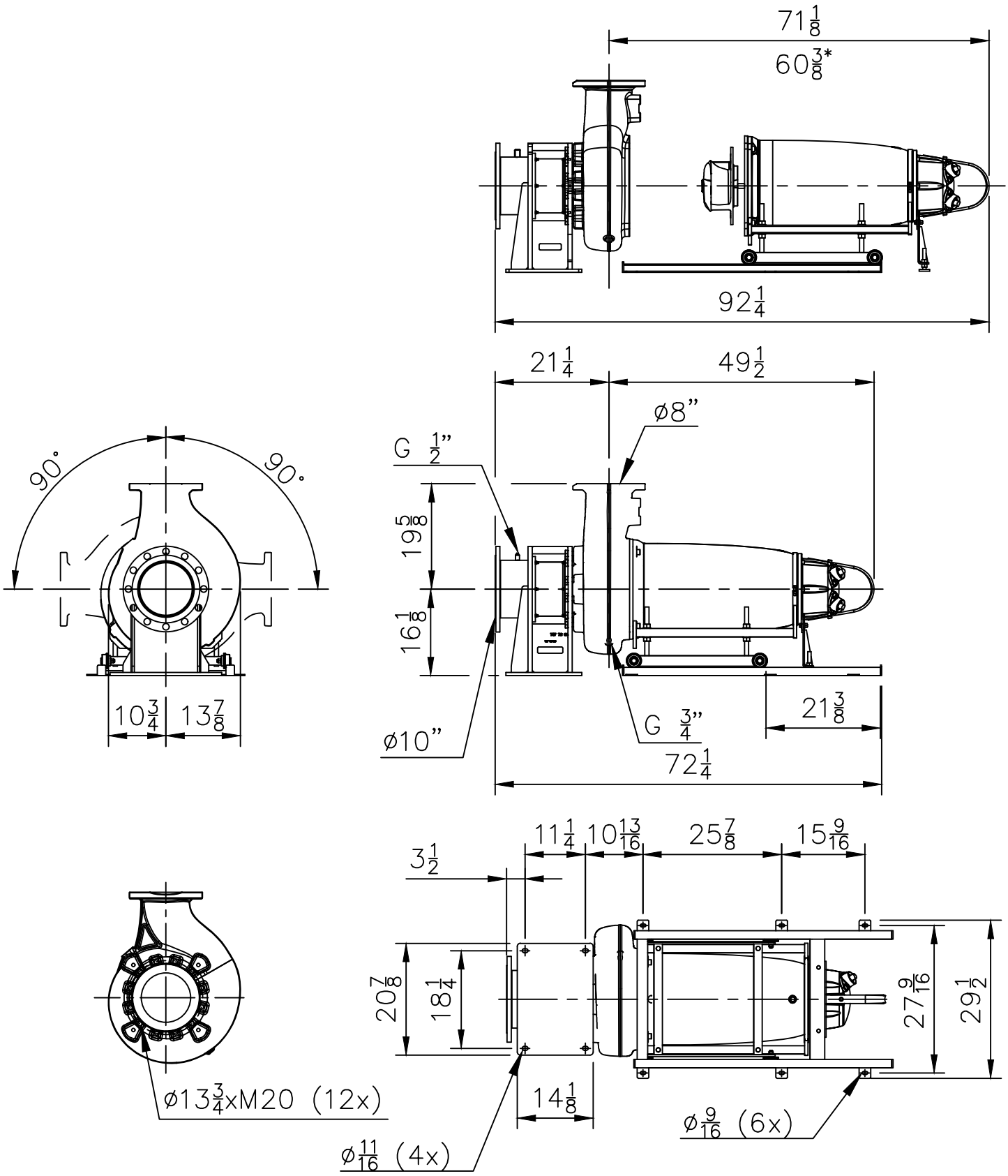

* Minimum protracting distance to lift drive unit straight up without hitting pump housing

Weight	Pump	Stand	Service cart	Rail
lbs	1655	230	70	30

FLYGT	NZ,FZ	3202	MT	Service cart 6-poles	Discharge outlet	Scale 1:25	Date 190703
					Pump outlet ø8"		
	800,810,820,830,840,850,860,870				Pump inlet ø10"	Drawing number 7795001	Revision 5
					Suction inlet ø10"		

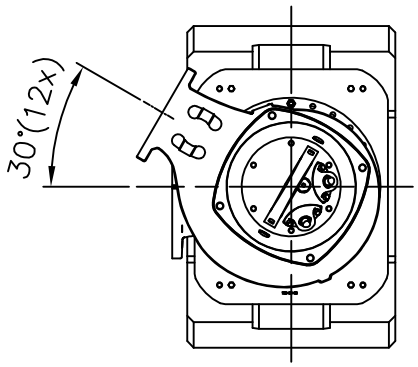

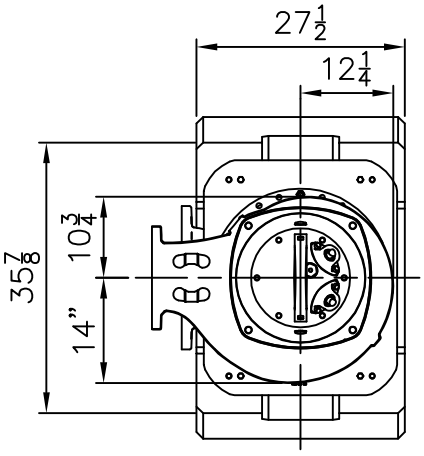

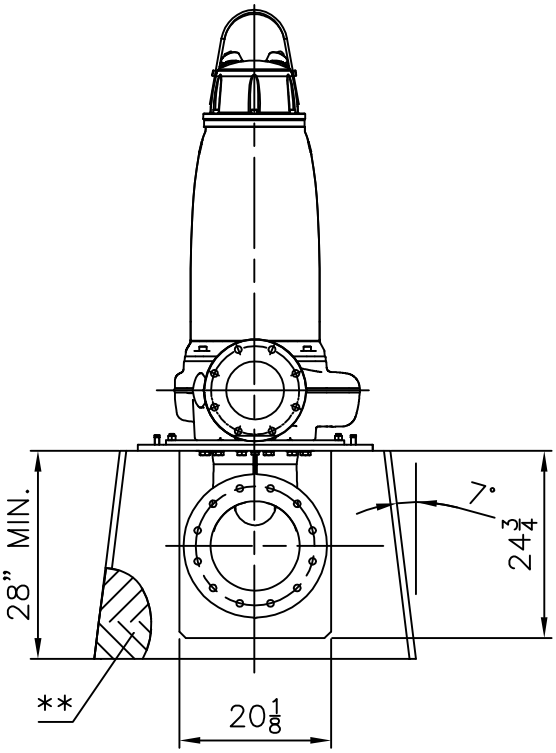

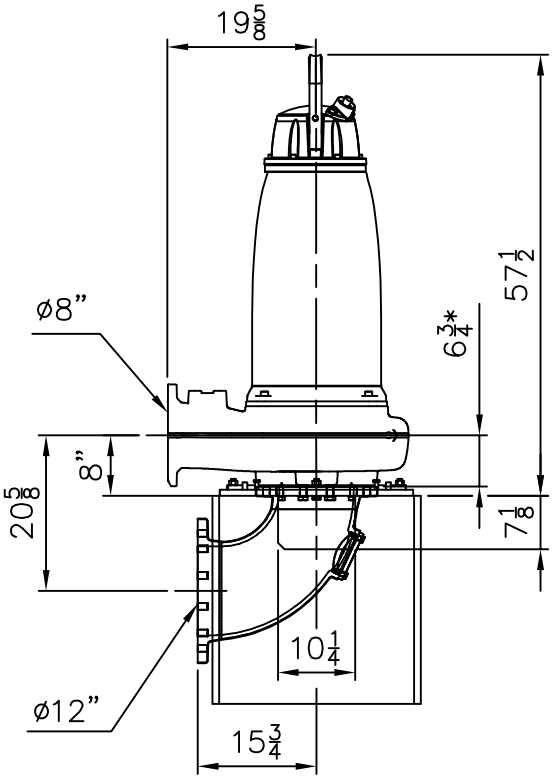

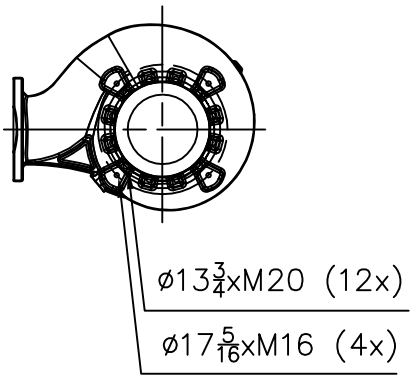

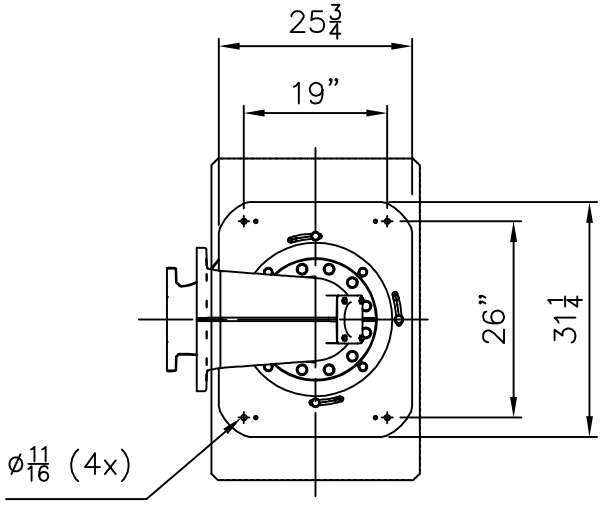

* Dimension to inlet elbow flange.
** Concrete plinth not supplied by Xylem.

WEIGHT (lbs)		
Pump	Stand	Inlet elbow
1655	90	225

FLYGT	NT,FT	3202	MT	6-poles	Discharge outlet / Pump outlet ø8"	Scale 1:25	Date 190927
	800,810,820,830,840,850,860,870				Pump inlet ø10" / Suction inlet ø12"	Drawing number 7796500	Revision 6

Customer Price Sheet Details

Customer		Size / Stages	EMU FA20.97Z with Motor FK34.1-6/24 / 1
Item number	001	Pump speed	1150 rpm
Customer reference		Quote number	2085821

Totals

Grand Total	$ 279,978.00	Lead Time Total	N/A
Pump Total	$ 277,713.00		
Accessories Total	$ 2,265.00		

Pump

Qty	Part Number	Description	Unit Price	Extended Price
3		*EMU FA20.97Z with Motor FK34.1-6/24*	*$ 80,090.00*	*$ 240,270.00*
		Configurator		
		Volute Options		
		Material Combination: 135		
		Trim: 13.70 in		
		Motor		
		Voltage: 3/60/460V		
		Motor: FK34.1-6/24 53.7 HP		
		Explosion Proof: No Protection		
		Cable Length: 15m		
		Power Cable: 4x16		
		Control Cable: 4x1.5		
		Moisture Cable and Probe: 1x1.5		
		Installation Type		
		Installation Type: Dry-Pit		
3		Dry-Pit Base Plate	$ 4,981.00	$ 14,943.00
3		Suction Elbow: DN250 (10in), Free Hanging, DN/ANSI	$ 7,500.00	$ 22,500.00
Pump Total				$ 277,713.00

Accessories

Qty	Part Number	Description	Unit Price	Extended Price
		Relays		
3	2763882	Relays: Seal leak + Bi-Metalic Thermal PMR1 Combo Relay	$ 755.00	$ 2,265.00
Accessories Total				$ 2,265.00